~~EQUIP. TYPE R390A/URR EXP. NO.~~ ~~COL. 540 7547 002~~

NOTICE: WHEN GOVERNMENT DRAWINGS, SPECIFICATIONS, OR OTHER DATA ARE USED FOR ANY PURPOSE OTHER THAN IN CONNECTION WITH A DEFINITELY RELATED GOVERNMENT PROCUREMENT OPERATION, THE UNITED STATES GOVERNMENT THEREBY INCURS NO RESPONSIBILITY NOR ANY OBLIGATION WHATSOEVER; AND THE FACT THAT THE GOVERNMENT MAY HAVE FORMULATED, FURNISHED, OR IN ANY WAY SUPPLIED THE SAID DRAWINGS, SPECIFICATIONS, OR OTHER DATA IS NOT TO BE REGARDED BY IMPLICATION OR OTHERWISE AS IN ANY MANNER LICENSING THE HOLDER OR ANY OTHER PERSON OR CORPORATION, OR CONVEYING ANY RIGHTS OR PERMISSION TO MANUFACTURE, USE, OR SELL ANY PATENTED INVENTION THAT MAY IN ANY WAY BE RELATED THERETO.

THIS DOCUMENT HAS BEEN PURCHASED BY THE GOVERNMENT AND MAY BE REPRODUCED AND USED IN CONNECTION WITH ANY GOVERNMENT PROCUREMENT OR MAINTENANCE OPERATION.

*FOR INFORMATION ONLY. CONTRACTOR MAY AT HIS OPTION DEVIATE FROM THESE PROCESS DETAILS.

REVISIONS			
SYM	DESCRIPTION	DATE	APPROVAL

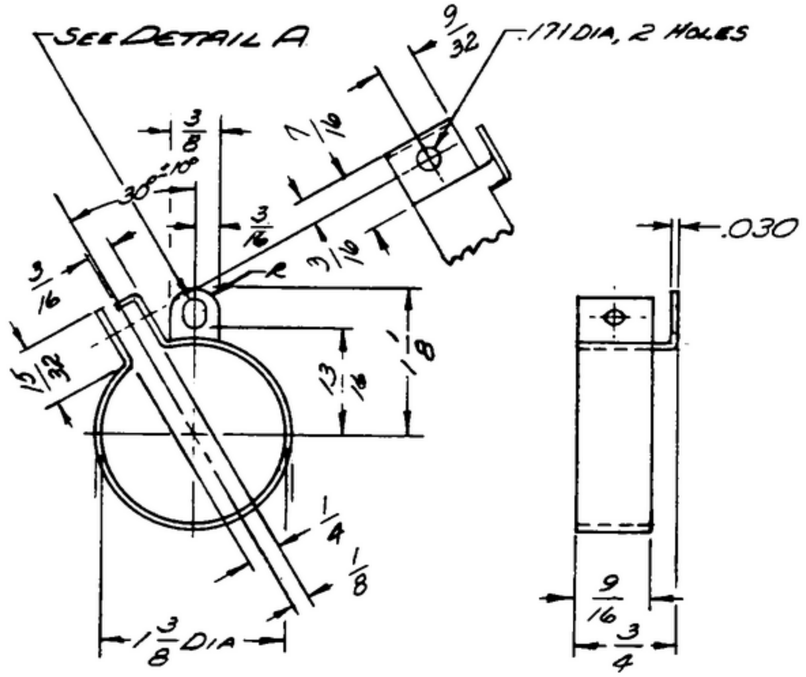

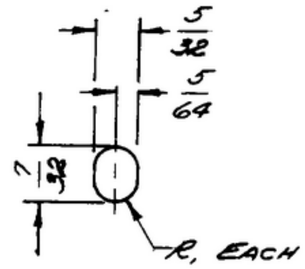

DETAIL A
SCALE: 2/1
1 REQUIRED

NOTES:
1. ALL CORNER AND INSIDE BEND RADII NOT TO EXCEED 3/64.

STEEL, COLD ROLLED, COND 4, SOFT SKIN ROLLED BEST BRIGHT FINISH PER SPEC QQ-S-636.

FINISH: M262 PER SPEC MIL-F-14072.
~~* COLLINS 580 0014 00.~~

~~COLLINS PART NO.~~	~~ITEM~~	~~REQD~~	~~PART NO.~~	~~DESCRIPTION~~	~~MATL~~	~~MATL SPEC~~

LIST OF MATERIAL ~~COLLINS PART NO. 558 0334 002~~

~~COLLINS NO.~~	~~QTY~~	NEXT ASSY	USED ON
~~558 0340 004~~	~~2~~	SM-D-248801	SC-DL-248775

APPLICATION

DRAWN NUGEN | CHECKED [signature] | APPROVED

UNLESS OTHERWISE SPECIFIED:
DECIMAL DIMENSIONS INCLUDING HOLE SIZES MAY VARY ±.005
FRACTIONAL DIMENSIONS INCLUDING HOLE SIZES MAY VARY ±1/64
MACHINED ANGLES MAY VARY ±.1°
SHEARED ANGLES MAY VARY ±.25°
BROKEN ANGLES MAY VARY ±1.°
ECCENTRICITY BETWEEN ANY DIAMETERS ON THE SAME CENTERLINE SHALL NOT EXCEED .010 TOTAL INDICATOR READING.
ALL DIMENSIONS ARE FINISH DIMENSIONS INCLUDING APPLIED FINISH AND ARE GIVEN IN INCHES.

~~COLLINS RADIO CO. CEDAR RAPIDS, IOWA~~
14214-PH-51-93
SIGNAL CORPS
REVIEWED PME
APPROVED HLY PME
DATE 16 DEC 55

CLAMP-CAPACITOR

SCALE 1/1

DEPARTMENT OF THE ARMY
SIGNAL CORPS ENGINEERING LABORATORIES
FORT MONMOUTH NEW JERSEY

SM-B-248985

PD-794—074-2071-10—A4766—330507

WHEN REFERRING TO THIS DRAWING STATE DRAWING NO., APPLICABLE ISSUE SYMBOL, IF ANY, AND DATE